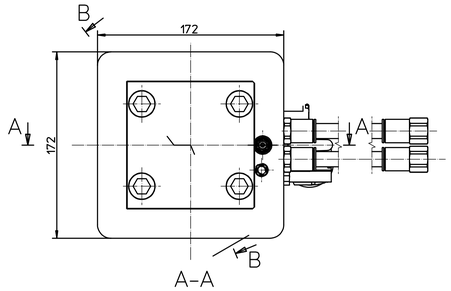

B-B

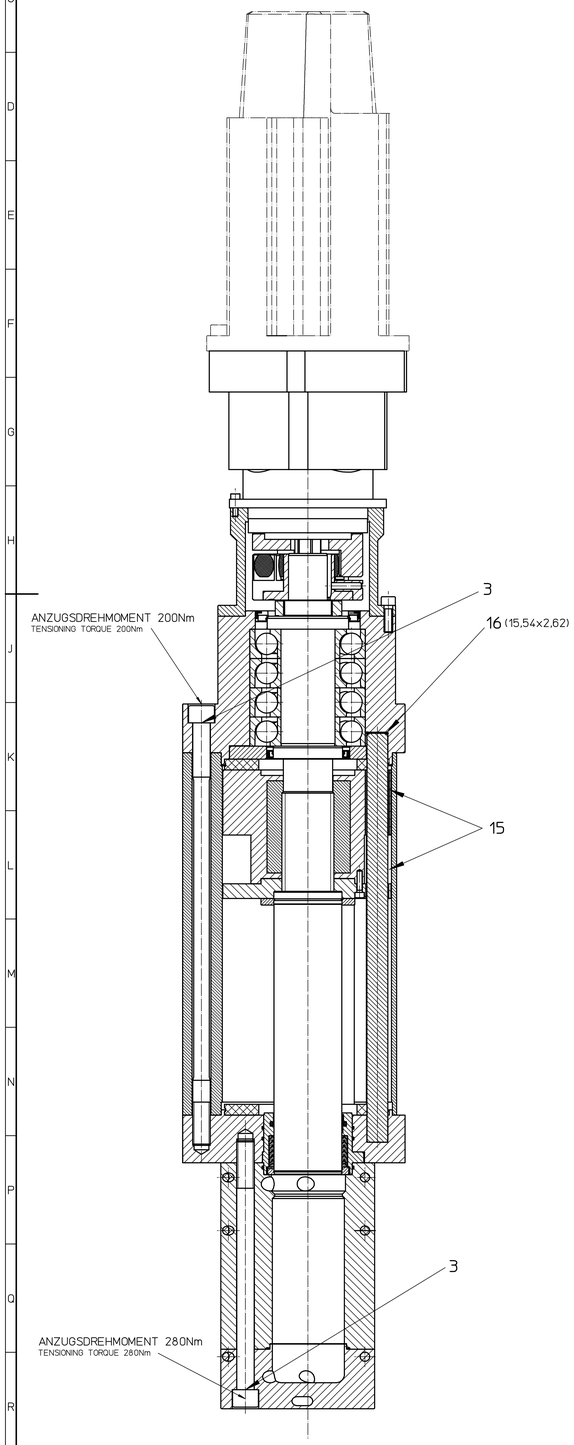

A-A

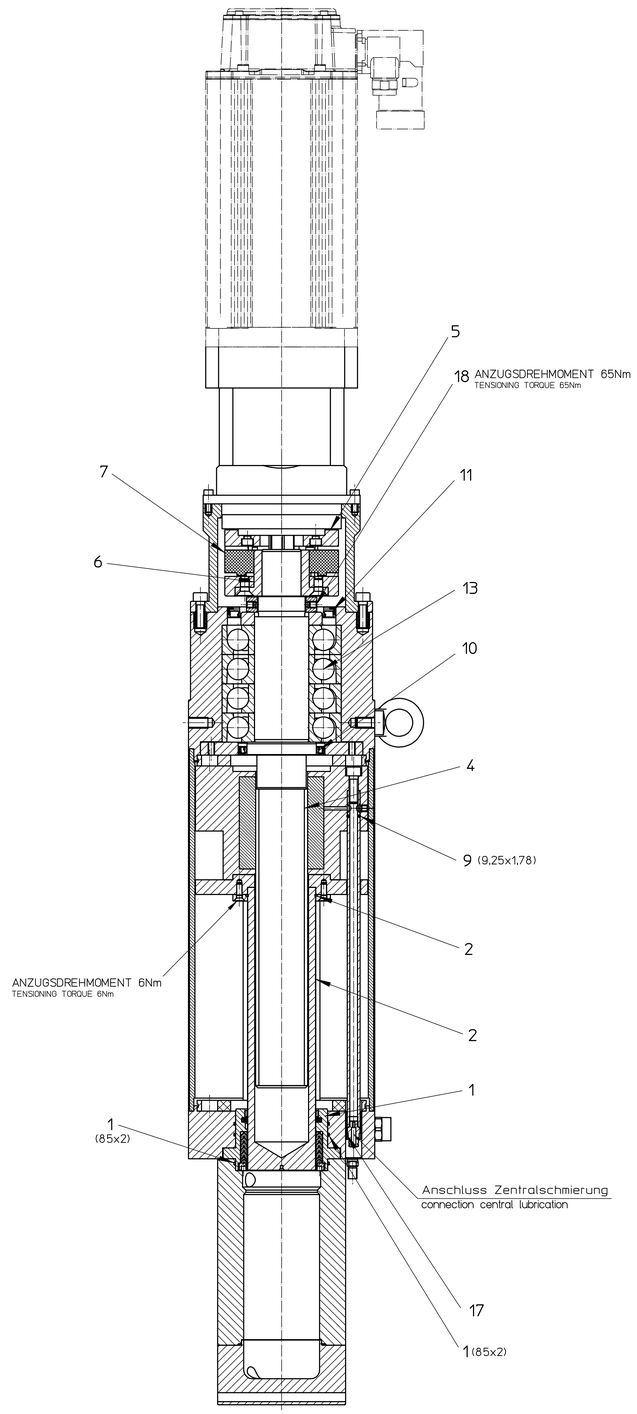

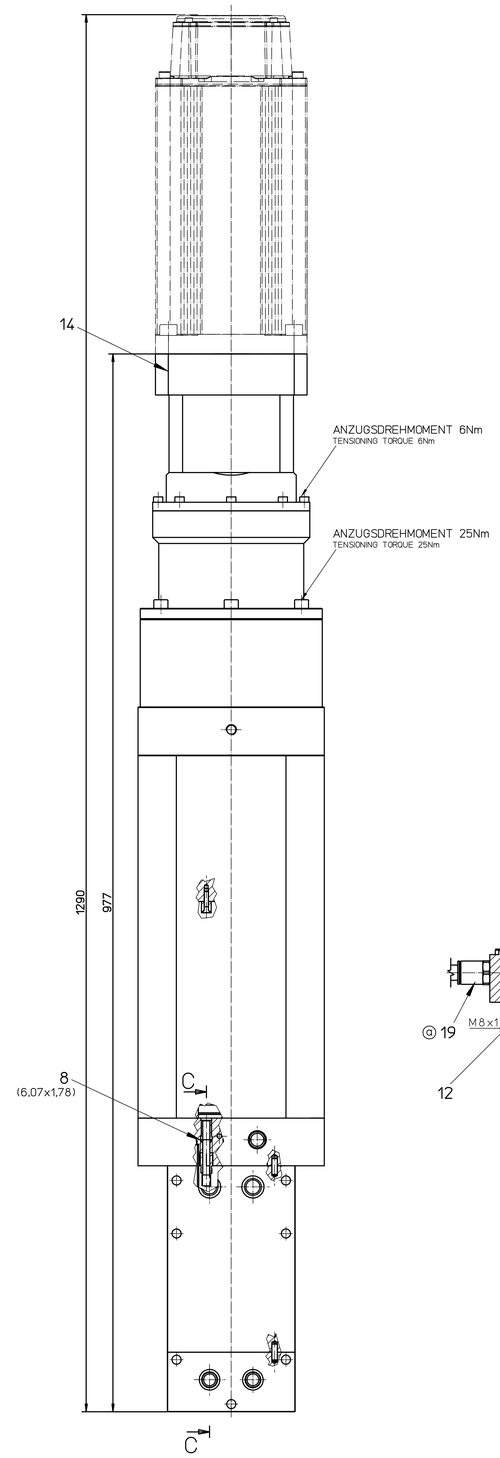

C-C

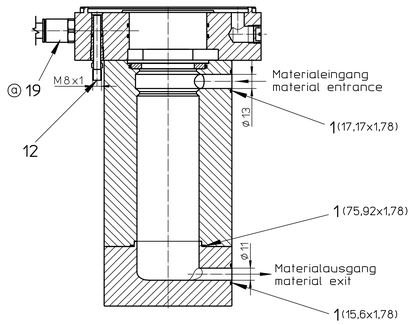

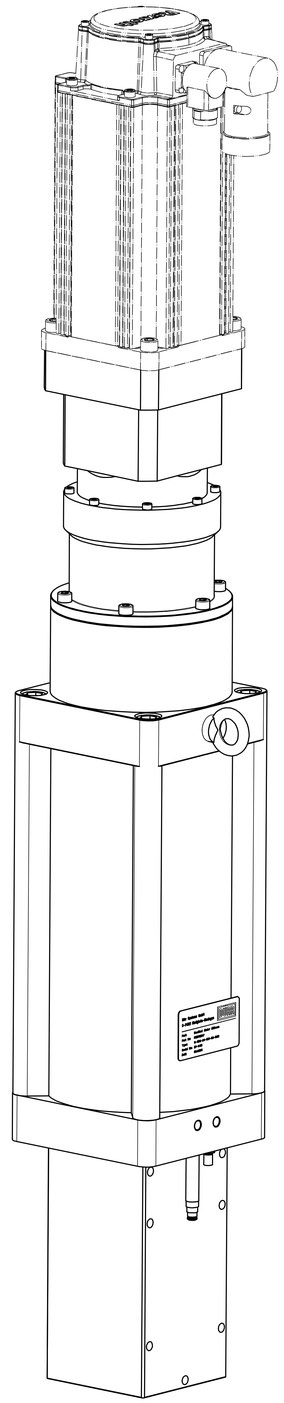

Max. zul. Pneum. Betriebsdruck:	6 bar
max. permissible pneum. pressure:	6 bar
Max. zul. Materialdruck:	350 bar
max. permissible material pressure:	350 bar

SURFACE	MATERIAL	PROFILE	WEIGHT
	/		81,000 kg

Copyright reserved - The reproduction, distribution and utilization of this document as well as the communication of its contents to others without express authorization is prohibited. Offenders are liable to the payment of damages. All rights reserved in the event of the grant of a patent, utility model or design.

✓	✓	▽Ra100	▽Ra25	▽Ra6,3	▽Ra 1		
±0,1	±0,2	±0,3	±0,5	±0,8	±1,2	±2,0	±3,0
0	6	30	120	400	1000	2000	4000
6	30	120	400	1000	2000	4000	8000

Allgemeintoleranzen / General tolerances ISO 2768-m

Nicht bemaßte Kanten 0,2x45° gebrochen
not dimensioned edges burred 0,2x45°

PT	UNIDADE DE DOSAGEM INLINE 1X590CCM VA
IT	UNITÀ DI DOSAGGIO INLINE 1X590CCM VA
BE	DOSEEREENHEID INLINE 1X590CCM VA
SE	DOSERENHET INLINE 1X590CCM VA
ES	UNIDAD DOSIFICADORA INLINE 1X590CCM VA
FR	UNITE DE DOSAGE INLINE 1X590CCM VA
DE	METERING UNIT INLINE 1X590CCM VA

Benennung Denomination Denomination Denominazione Denominacion

ISSUE	AMENDMENT	DATE	NAME
A	10-906-070	2010-10-14	DEBESRW

DRAWN	2009-05-05	DEBESRW
CHECKED	2010-10-15	DEBEMAR
RELEASED	2010-10-15	DEBESRW
STATUS		

DÜRR

Copyright reserved

SCALE 1:2

DOSIEREINHEIT
INLINE 1X590CCM VA

STATE: 2010-12-09
ORIGINAL:
REPLACEM. FOR:
REPLACED WITH:
DOCUMENT TYPE:
MATERIAL-NO. N10010017
DOCUMENT-NO. N1001 0017
VERSION
DOC. PART
REVISION
SHEET/TOTAL 1/
A0