FLUSH MEMBRANE TYPE DIAPHRAGM SEAL DT127

DT127 diaphragm seal is designed to be used in highly viscous process media such as pulp, paper, waste treatment, and plastic/ chemical process industries. DT127 is easy to assemble with pressure gauges, pressure switches, and pressure instruments.

Technical Data

Instrument Connection: female thread ¼" to ½"NPT or BSP
Process Connection: 1" to 3" Flange, JIS, ANSI, DIN rating available
Temperature Limited: -40~+150°C cooling element or capillary line up to 350°C
Pressure Range & Flange Size Limited:
ø36 Membrane: Maximum up to 40 kg/cm²; Minimum 0~10 kg/cm²
Minimum process flange 1" x 150#
ø45 Membrane: Maximum up to 40 kg/cm²; Minimum 0~6 kg/cm²
Minimum process flange 1½" x 150# or 2" x 150#
ø55 Membrane: Maximum up to 40 kg/cm²; Minimum 0~4 kg/cm²
Minimum process flange 2½" x 150#
ø75 Membrane: Maximum up to 40 kg/cm²; Minimum -1~0 kg/cm²
Minimum process flange 3" x 150#
Option: Upper pressure available, according to flange rating on request

Dimensions

Item	Description of Parts
a	Instrument connection
b	Upper housing
c	Lower housing
d	Membrane
e	Filling port

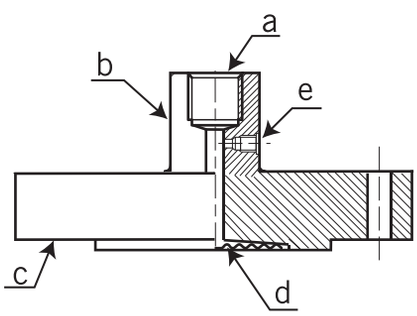

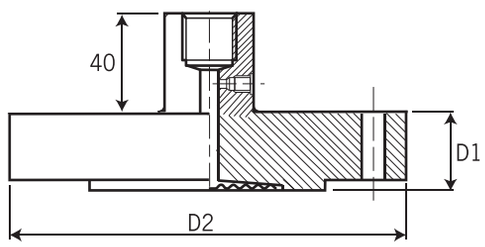

D1: Dimension to suit standard flange thickness.
D2: Dimension to suit standard flange outside size.
*as JIS, ANSI, DIN, etc.

Ordering Information

DT127	Code	Instrument Connection (Female)
		(A) ¼"BSP (B) ¼"NPT (C) ⅜"BSP (D) ⅜"NPT (E) ½"BSP (F) ½"NPT

Code	Membrane size
	(A) Ø36 (B) Ø45 (C) Ø55 (D)Ø75

Code	Process connection rating
	(1) 1" (2) 1½" (3) 2" (4) 2½" (5) 3" (6) Option

Code	Flange rating
	(1) 150# (2) 300# (3) PN16 (4) PN25 (5) JIS 10K (6) JIS 20K (7) Option

Code	Upper housing material
	(S) SS316(standard) (O) Option

Code	Lower housing material
	(S) SS316 (O) Option

Code	Membrane material
	(1) SS316L (2) Hastelloy C276 (3) Tantalum (4) Option

DT127								Complete ordering code

WWW.NEW-FLOW.COM • TEL: 886-7-8135500 • FAX: 886-7-8225588 • Email: info@new-flow.com